Picture of the Month

Shayna Burke, MD; April O. Buchanan, MD; Natasha Shur, MD; Katarina Gambosova, MD; Gita V. Harappanahally, MD; J. B. Quintos, MD

A 16-YEAR-OLD MALE PATIENT PRESENTED with slurred speech, somnolence, and hypotension after a diagnosis of streptococcal pharyngitis 3 days earlier. He had significantly darker skin than his family members (**Figure 1**). During the prior year, his athletic abilities had deteriorated. He also frequently complained of fatigue. His medical history was significant for a diagnosis of attention-deficit/hyperactivity disorder and several hospitalizations for dehydration. The family history was notable for several great-grandmothers who had dementia, and deaths in 3 of the maternal great-grandmother's sons at ages 5, 6, and 7 years, raising concern for an X-linked disease with female carriers and affected males (**Figure 2**).

On physical examination, the patient's height was 170 cm (25th-50th percentile), his weight was 50 kg (tenth percentile), and his head circumference was 52 cm (tenth percentile). His blood pressure lying down and sitting was 92/46 mm Hg and 77/56 mm Hg, respectively. He was cachectic with a generalized tan and had mucosal pigmentation of his lower lip (**Figure 3**). He had bilateral hammer toes and talipes cavus. A neurological examination revealed poor attention, concentration, and recall and spasticity of the lower extremities. He had brisk deep tendon reflexes with bilateral ankle clonus and decreased vibration and position sense in his feet. He was unable to walk standing fully upright without using support and had bilateral footdrop.

Author Affiliations: Rhode Island Hospital, The Warren Alpert Medical School of Brown University, Providence (Drs Burke, Shur, Gambosova, Harappanahally, and Quintos); and Children's Hospital, Greenville Hospital System University Medical Center, University of South Carolina School of Medicine, Greenville (Dr Buchanan).

Figure 1. Generalized hyperpigmentation of the patient compared with his family.

See http://www.archpediatrics.org for the Picture of the Month Web Quiz: What is your diagnosis?

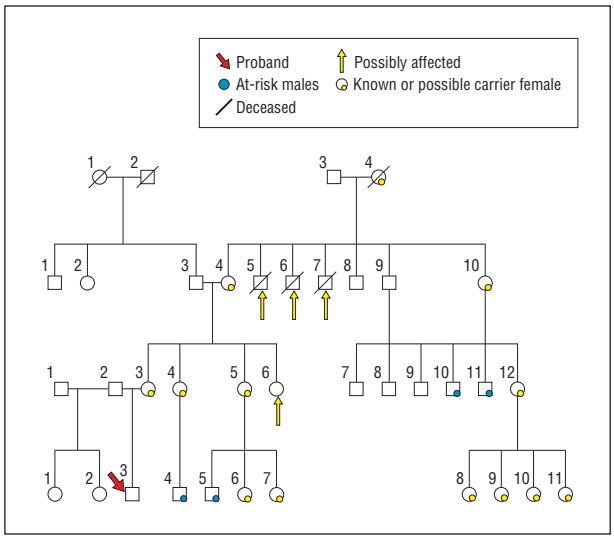

Figure 2. Patient's family pedigree.

Figure 3. Mucosal pigmentation of the patient's lower lip.

©2010 American Medical Association. All rights reserved.
Downloaded From: http://archpedi.jamanetwork.com/ on 07/03/2015